CONTROL No: 1119

| REV | DATE | ECO | DESCRIPTION | BY | CK | APP |
|---|---|---|---|---|---|---|
| - | 11/14/07 | NA | INITIAL RELEASE | JMM | NA | NA |

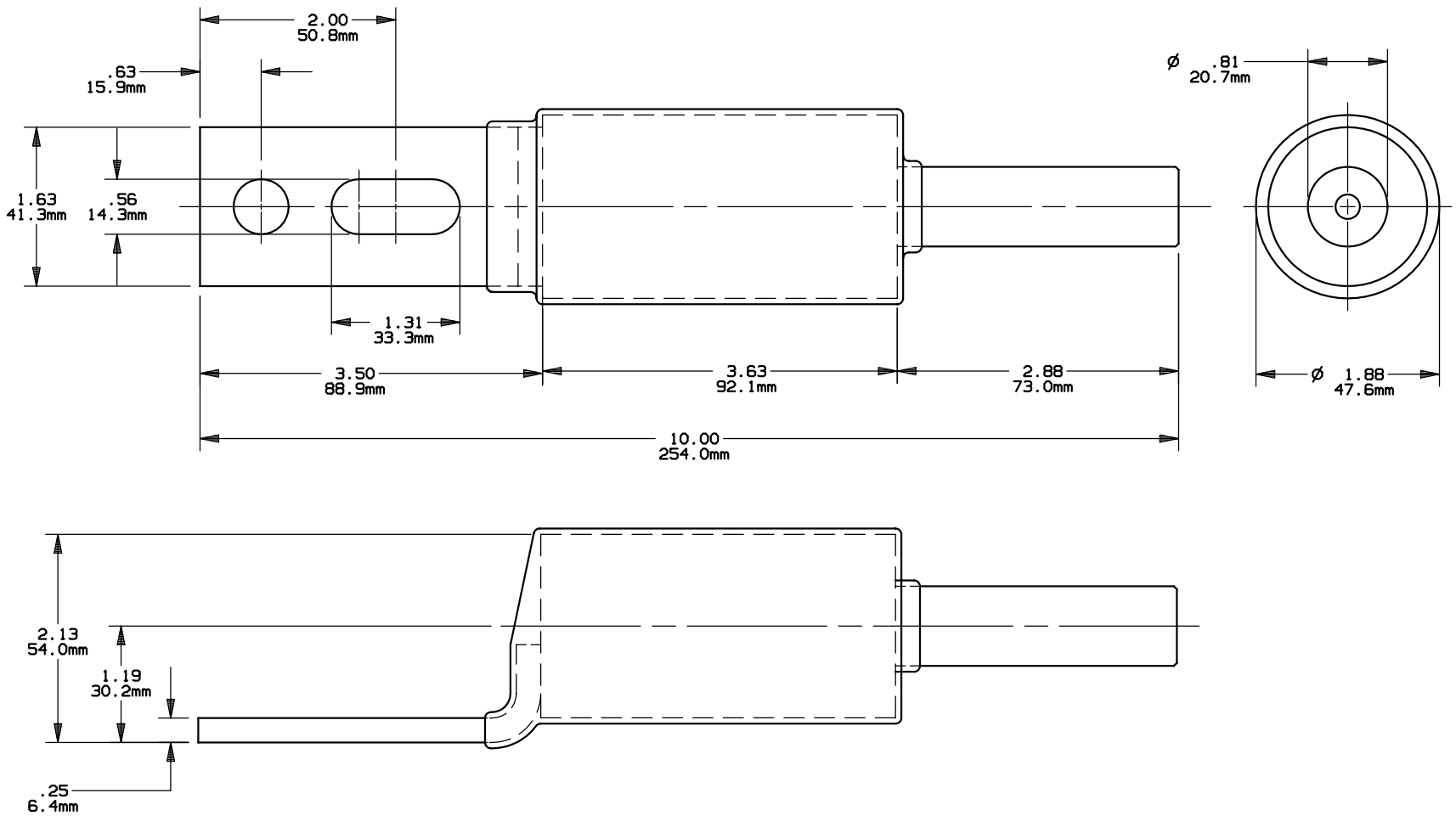


MERSEN

MERSEN USA NEWBURYPORT-MA, LLC
374 MERRIMAC STREET
NEWBURYPORT, MA 01950

| PRODUCT MANAGER | DESIGN ENGINEER |
|---|---|
| SIGN: | SIGN: |
| DATE: | DATE: |

CP500C8-HS

CABLE PROTECTOR

FOR 500 MCM COPPER OR ALUMINUM CABLE

OUTLINE DIMENSIONS
NOT TO BE USED FOR PRODUCTION

701407