REV	DATE	ECO	DESCRIPTION	BY	CK
00	7/90		RELEASED		BM
01	5/92	055	REVISED/UPDATED	GO	BM

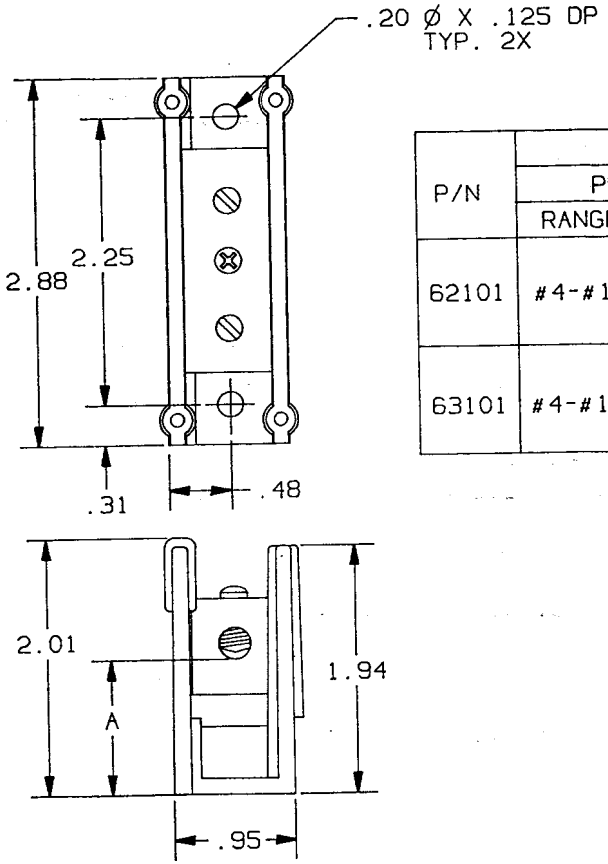

P/N	WIRE RANGE & TORQUE (IN-LBS)						UL		CSA	A
	PRIMARY			SECONDARY						
	RANGE	TORQUE		RANGE	TORQUE		FILE NO.	GUIDE NO.	REPORT NO.	
62101	#4-#14	#4-#6	35	#4-#14	#4-#6	35	E73571	XCFR2	LR69363	.90
		#8	25		#8	25				
		#10-#14	20		#10-#14	20				
63101	#4-#14	#4-#6	35	#4-#14	#4-#6	35	E73571	XCFR2	LR69363	1.07
		#8	25		#8	25				
		#10-#14	20		#10-#14	20				

REFERENCE

MAY 21 1992

P/N 62101 (CU ONLY)
P/N 63101 (CU-AL)

2. (1)#4-#14 X (1)#4-#14 1 POLE 600V
1. MATL COMPOSITION AND RATING:
   BASE-THERMOPLASTIC -125°C RTI
   CONNECTOR-ALUMINUM OR COPPER
   ALLOY-TIN PLATED.

NOTES:

GOULD
CIRCUIT PROTECTION DIV.
GOULD INC.
P.O. BOX 729
MARBLE FALLS, TX 78654

DRAWN BY: CSWILLIAMS DATE: 7/90
INIT. REL.
CHECKED BY: G.OAKLEY DATE: 7/90
SCALE: NONE
DESCRIPTION: PDB

TOLERANCE TO BE APPLIED UNLESS OTHERWISE SPECIFIED: .XXX±.0005; .XXX±.005; .XX±.01; .X±.02; X/X±1/32
UNSPECIFIED ANGLES±1°, SPECIFIED ANGLES±0°30'
DIMENSIONS APPLY AFTER PLATING
ALL SURFACES TO BE 125 UNLESS OTHERWISE SPECIFIED
BREAK ALL SHARP EDGES
THIS DRAWING AND ALL INFORMATION THERE ON IS THE PROPERTY OF GOULD INC. AND IS SUBJECT TO RETURN ON DEMAND. THIS INFORMATION IS CONFIDENTIAL AND MUST NOT BE MADE PUBLIC OR COPIED UNLESS AUTHORIZED.
REFDOC:

IDENTIFICATION NO. & REVISION: 0580278