REV	DATE	ECO	DESCRIPTION	BY	CK
00	3/94		RELEASED	GO	
01	4/94	1403	REV DIMS	GO	GO

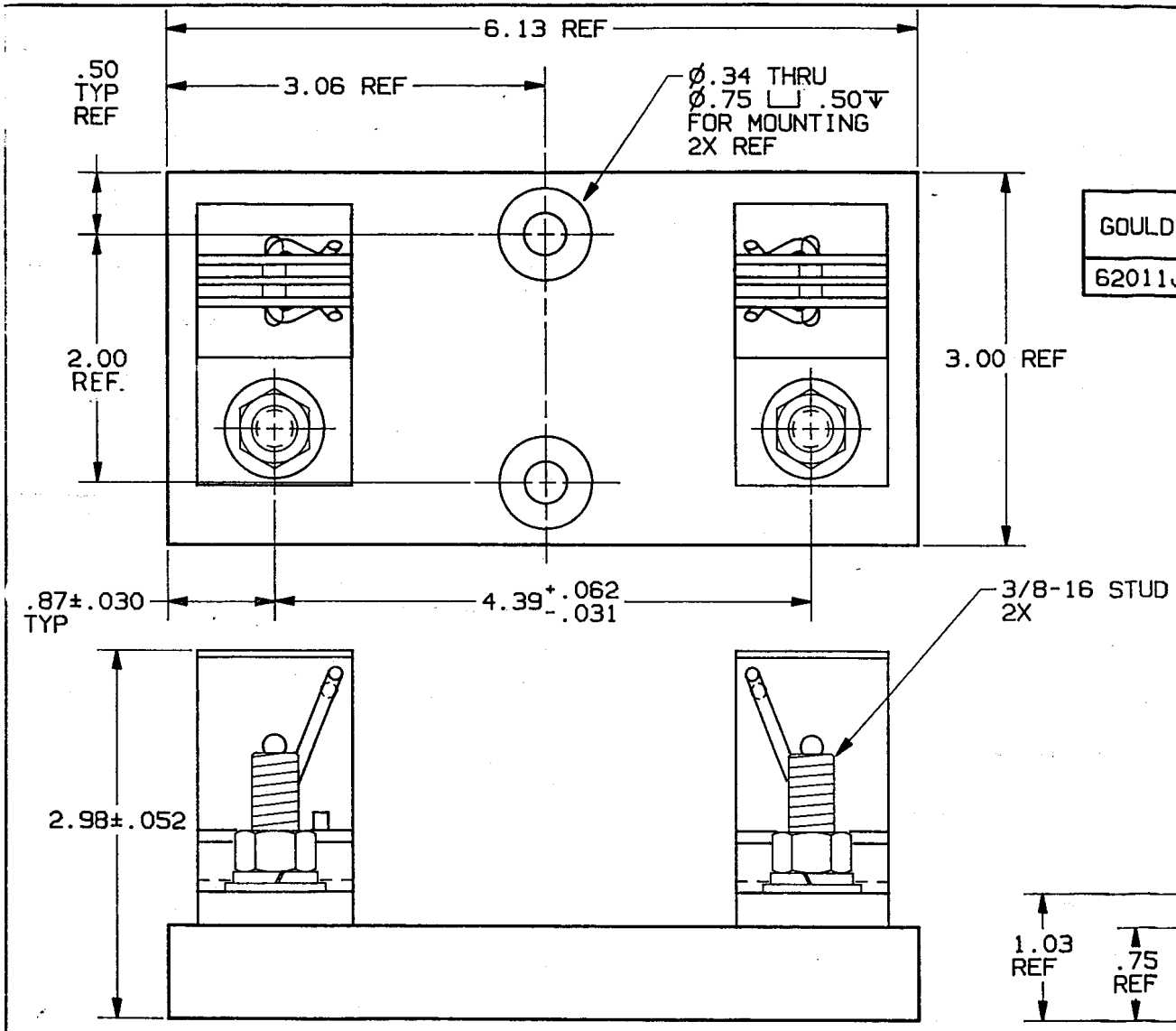

GOULD P/N	CONN TYPE	RMS SYM RATING	TORQUE (IN-LBS)	UL		CSA
				FILE NO.	GUIDE NO.	REPORT NO.
62011J	STUD	10K	228	E52283	IZLT2	LR32169

CONTROLLED COPY
ISSUED TO Newburyport
DATE APR 1 1 1994

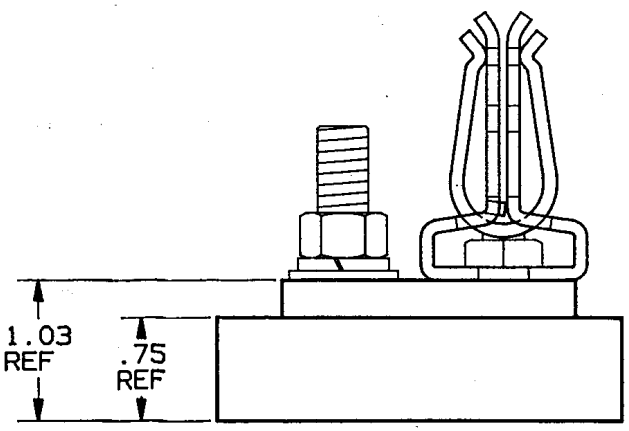

P/N 62011J

2. 600V/200A, STUD CONNS, CLASS J., ONE POLE

1. MATERIALS: BASE - PHENOLIC
CONNECTOR - STEEL STUD W/ TIN PLATED COPPER ALLOY BUSS AND CLIP.

NOTES: UNLESS OTHERWISE SPECIFIED

GOULD
GOULD INC.
P.O. BOX 725
MARBLE FALLS, TX 78654
CIRCUIT PROTECTION DIV.

DRAWN BY:	DATE:	UNIT. REL.
KDS	3/94	
CHECKED BY: GO	DATE: 3/94	SCALE: NONE

TOLERANCE TO BE APPLIED UNLESS OTHERWISE SPECIFIED: .XXXX±.00051, .XXX±.0051, .XX±.011, .X±.02: X/X±1/32
UNSPECIFIED ANGLES±1°, SPECIFIED ANGLES±0°30'
DIMENSIONS APPLY AFTER PLATING
ALL SURFACES TO BE 125√ UNLESS OTHERWISE SPECIFIED
BREAK ALL SHARP EDGES
THIS DRAWING AND ALL INFORMATION THERE ON IS THE PROPERTY OF GOULD INC. AND IS SUBJECT TO RETURN ON DEMAND. THIS INFORMATION IS CONFIDENTIAL AND MUST NOT BE MADE PUBLIC OR COPIED UNLESS AUTHORIZED.
REFDOC:

DESCRIPTION: FUSE BLOCK
IDENTIFICATION NO. & REVISION: 05B0475 01