REV	DATE	ECO	DESCRIPTION	BY	CK
00	5/93		RELEASED		

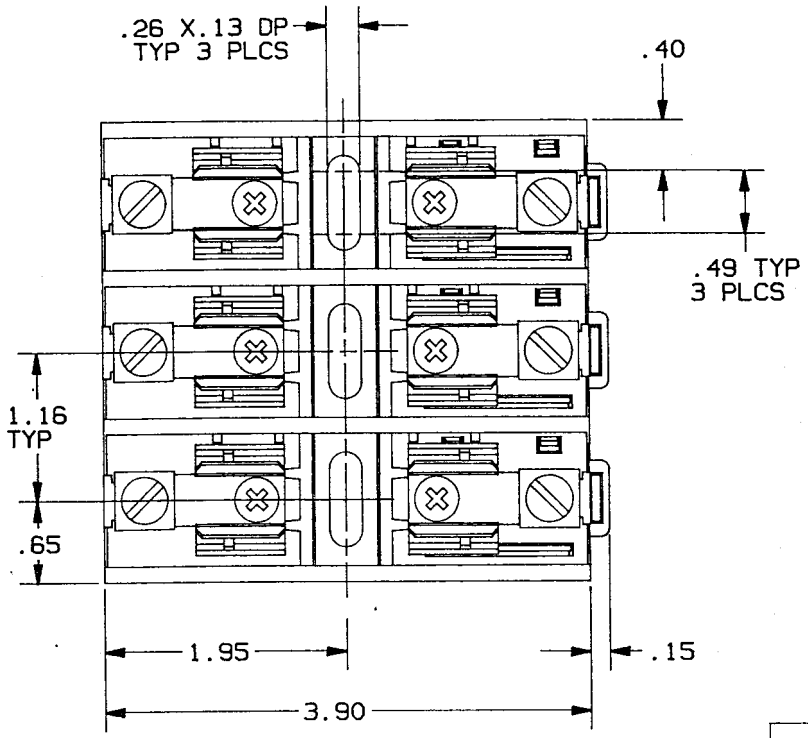

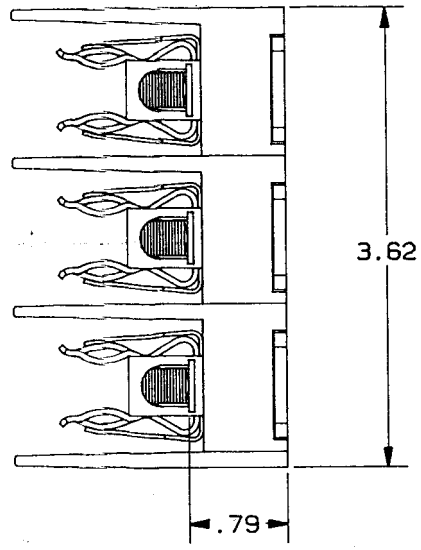

CONTROLLED COPY
ISSUED TO Newburyport
DATE MAY 12 1993

P/N	FUSE CLASS	RMS SYM RATING	TORQUE (IN-LBS)	WIRE		UL		CSA
				°C	TYPE	FILE NO.	GUIDE NO.	REPORT NO.
60308SJ	J	200K	35	60/75	CU-AL	E52283	IZLT	LR32169

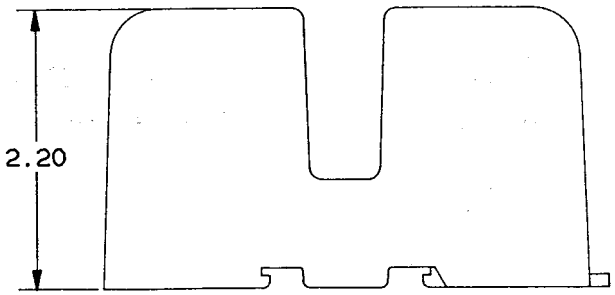

NOTES: UNLESS OTHERWISE SPECIFIED
1. HOLDER, 600V-30A CLASS "J" FUSE, 3 POLE
2. MATERIAL COMPOSITION AND RATING:
   BASE- THERMOPLASTIC 125°C RTI
   CONNECTOR-ALUMINUM, TIN PLATED.

P/N 60308SJ

GOULD CIRCUIT PROTECTION DIV.
GOULD INC. P.O. BOX 728 MARBLE FALLS, TX 78654

DRAWN BY:	DATE:	INIT. REL.
KDS	5/93	
CHECKED BY:	DATE:	SCALE:
GHO	5/93	NONE

TOLERANCE TO BE APPLIED UNLESS OTHERWISE SPECIFIED: .XXXX±.00051, .XXX±.0051, .XX±.011, .X±.021 X/X±1/32
UNSPECIFIED ANGLES±1°, SPECIFIED ANGLES±0°30'
DIMENSIONS APPLY AFTER PLATING
ALL SURFACES TO BE 125√ UNLESS OTHERWISE SPECIFIED
BREAK ALL SHARP EDGES
THIS DRAWING AND ALL INFORMATION THERE ON IS THE PROPERTY OF GOULD INC. AND IS SUBJECT TO RETURN ON DEMAND. THIS INFORMATION IS CONFIDENTIAL AND MUST NOT BE MADE PUBLIC OR COPIED UNLESS AUTHORIZED.
REFDOC:-

DESCRIPTION: FUSE BLOCK, RAIL APPLICATIONS
IDENTIFICATION NO. & REVISION: 05B0432 00